Aerodynamic Optimization of Car Shape using CFD

Komal Rawat
PG Scholar, Department of Mechanical Engineering, BTKIT Dwarahat, India.

Hina Akhtar
PG Scholar, Department of Mechanical Engineering, BTKIT Dwarahat, India.

Jaya Verma
PG Scholar, Department of Mechanical Engineering, BTKIT Dwarahat, India.

Ravi Kumar
Assistant professor, Department of Mechanical Engineering, BTKIT Dwarahat, India.

Vinod Kumar
Assistant professor, Department of Mechanical Engineering, BTKIT Dwarahat, India.

Abstract – In this project, three different models of car were developed in solid works and applied the boundary conditions in ANSYS workbench 14. The research presents a discussion on the results obtained from numerical simulation of airflow over a passenger car without a rear spoiler and compares these with results obtained for a passenger car fitted with a rear spoiler. The influence of rear spoiler on the generated lift, drag, and pressure distributions are investigated and reported. The approach followed is "model-mesh-analyze" using computational fluid dynamics (CFD) being the chosen solver procedure. In conclusion, the study reveals that rear spoilers have considerable effect on Lift, i.e. vehicle stability and moderate effect on Drag i.e. Fuel consumption.

Index Terms – Aerodynamic Drag, Coefficient of Drag, Coefficient of Lift, Spoiler, Static Pressure, ANSYS FLUENT, CFD.

1. INTRODUCTION

Aerodynamics is a branch of dynamics concerned with studying the motion of air, particularly when it interacts with a moving object. Aerodynamics is a subfield of fluid dynamics and gas dynamics, with much theory shared between them. The term *aerodynamics* is often used synonymously with gas dynamics, with the difference being that "gas dynamics" applies to the study of the motion of all gases, not limited to air.

When objects move through air, forces are generated by the relative motion between air and surfaces of the body, study of these forces generated by air is called aerodynamics. Based on the flow environment it can be classified into external aerodynamics and internal aerodynamics; external aerodynamics is the flow around solid objects of various shapes, where as internal aerodynamics is the flow through passages in solid objects, for e.g. the flow through jet engine air conditioning pipe etc. The behavior of air flow changes depends on the ratio of the flow to the speed of sound. This ratio is called Mach number, based on this mach number the aerodynamic problems can be classified as subsonic if the speed of flow is less than that of sound, transonic if speeds both below and above speed of sound are present, supersonic if characteristics of flow is greater than that of sound and hypersonic if flow is very much greater than that of sound. Aerodynamics have wide range of applications mainly in aerospace engineering ,then in the design of automobiles, prediction of forces and moments in ships and sails, in the field of civil engineering as in the design of bridges and other buildings, where they help to calculate wind loads in design of large buildings.

1.1 FACTORS CONTRIBUTING TO FLOW FIELD AROUND VEHICLE

The major factors, which affect the flow field around the vehicle, are the boundary layers, separation of flow field, friction drag and lastly the pressure drag.

Forces and Moment on a Vehicle

When the vehicle is moving at a considerable speed, there are several forces are applied to vehicle in different directions. Fig shows the details sketch view of the various forces acting on the vehicle body. As shown in the free body diagram below, there are six forces acting on the vehicle:

- Rolling Resistance
- Drag
- Lift
- Gravity

- Normal
- Motor

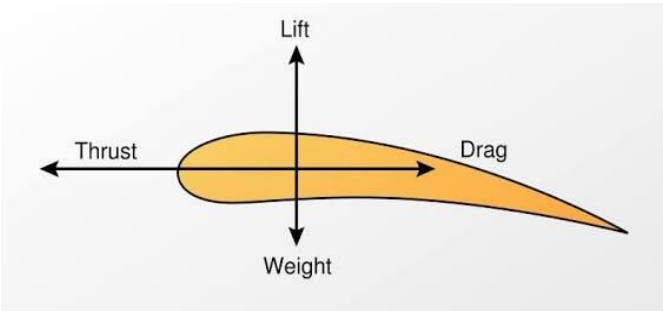

Figure 1. Aerodynamic forces on a body

2. THEORY

The governing equations for computational fluid dynamics are based on conservation of mass, momentum and energy. Both FLUENT and ANSYS CFX use a FVM to solve the governing equations. The FVM involves discretization and integration of the governing equations over the finite volume [4]. The flow is said to be turbulent when all the transport quantities (mass, momentum and energy) exhibit periodic, irregular fluctuations in time and space. Such conditions enhance mixing of these transport variables. There is no single turbulent model that can resolve the physics at all flow conditions. FLUENT and ANSYS CFX provides a wide variety of models to suit the demands of individual classes of problems. The choice of the turbulent model depends on the required level of accuracy, the available computational resources and the required turnaround time .

For the problem analyzed in this paper, standard k - ε turbulent model is selected for both 2D and 3D analysis. The k - ε model is one of the most common turbulent models. It is a semi - empirical, two-equation model, which means, it includes two extra transport equations to represent the turbulent properties of the flow. The first transport variable is the turbulent kinetic energy k. The second transport variable is the turbulent dissipation ε. It is the variable that determines the scale of the turbulence, whereas the first variable k determines the energy in the turbulence. The model transport equation for k is derived from the exact equation, while the model transport equation for k is obtained using physical reasoning and bears little resemblance to its mathematically exact counterpart [5]

2.1 Governing Equations

The continuity and momentum equations (Navier - Stokes equations) with a turbulence model were used to solve the airflow

$$\frac{\partial u}{\partial x}+\frac{\partial v}{\partial y}+\frac{\partial w}{\partial z}=0 \qquad 1$$

$$u\frac{du}{dx}+v\frac{du}{dy}+w\frac{du}{dz}=-\frac{1}{\rho}\frac{d\rho}{dx}+\frac{1}{\rho}\left(\frac{d\tau_{xy}}{dy}+\frac{d\tau_{xz}}{dz}\right)+B_x \qquad 2$$

$$u\frac{dv}{dx}+v\frac{dv}{dy}+w\frac{dv}{dz}=-\frac{1}{\rho}\frac{d\rho}{y}+\frac{1}{\rho}\left(\frac{d\tau_{xy}}{dx}+\frac{d\tau_{yz}}{dz}\right)+B_y \qquad 3$$

$$u\frac{dw}{dx}+v\frac{dw}{dy}+w\frac{dw}{dz}=-\frac{1}{\rho}\frac{d\rho}{y}+\frac{1}{\rho}\left(\frac{d\tau_{x}}{dx}+\frac{d\tau_{yz}}{dz}\right)+B_z \qquad 4$$

Where u is x - component of velocity vector, v is y - component of velocity vector and w is z - component of velocity vector. ρ is density of air, p is static pressure, τ is shear stress and Bx , By , Bz are body forces.

3. CFD MODEL

Three different geometries of a ground vehicle is modeled and then the comparison is done on the basis of the static pressure plots observed.

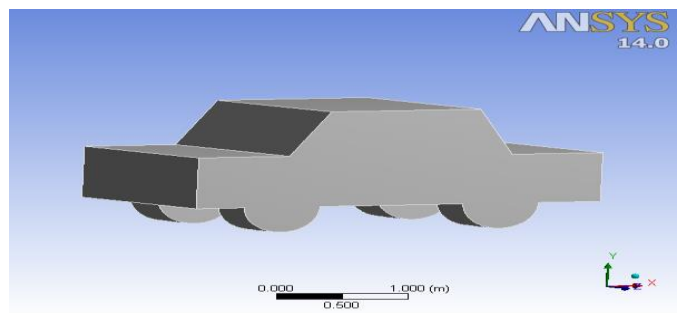

(a)

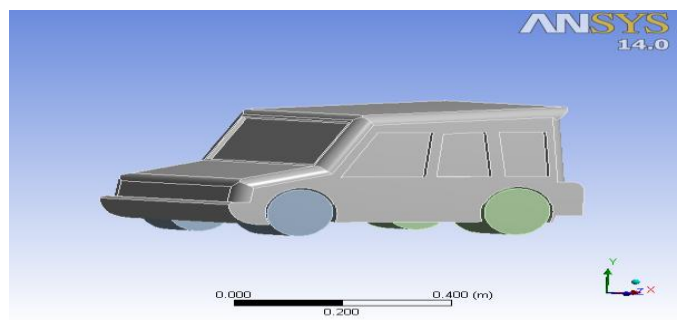

(b)

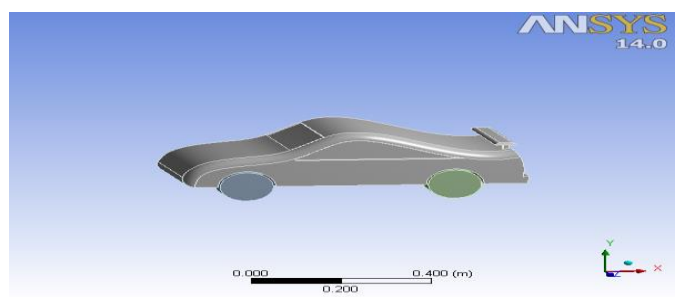

(c)

Figure 2:Cad Model of (a) geometry 1 (b) geometry 2 (c) geometry 3

4. MESHING

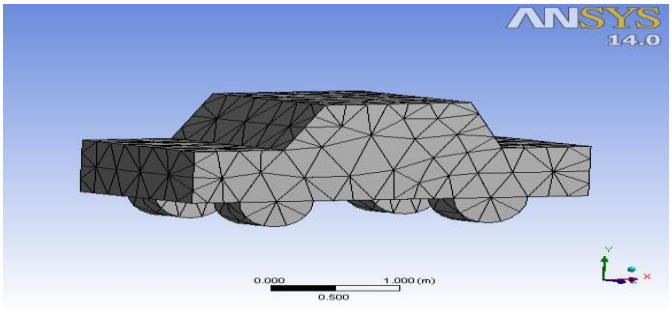

Fig. 3(a) Meshing of geometry 1

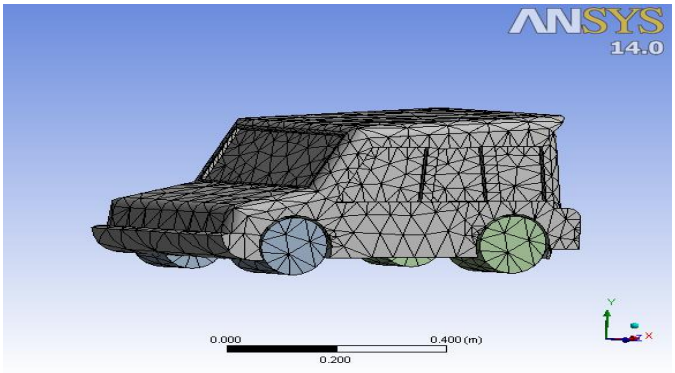

Fig. 3(b) Meshing of geometry 2

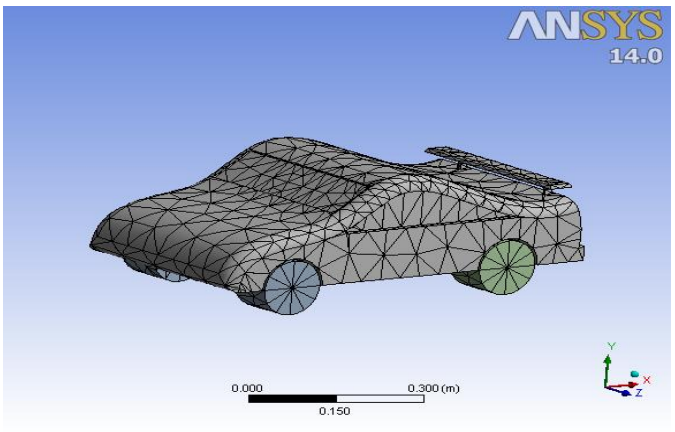

Fig. 3(c) Meshing of geometry 3

5. BOUNDARY CONDITIONS

The complex nature of many fluid flow behaviors has important implications in which boundary conditions are prescribed for the flow problem. A CFD user needs to define appropriate conditions that mimic the real physical representation of the fluid flow into a solvable CFD problem. Every different setup of the CFD domain needs to have an initialization, which is fulfilled by the boundary conditions input. The enclosure inlet plane was named "velocity-inlet". Air coming through the inlet was given a velocity of 300 m/s. The road and the vehicle body were both made walls. The surrounding enclosure surfaces, being imaginary surfaces, were all named symmetry planes having a „no slip" condition. The outlet was named a "pressure-outlet" with its pressure set constant and equal to atmospheric pressure.

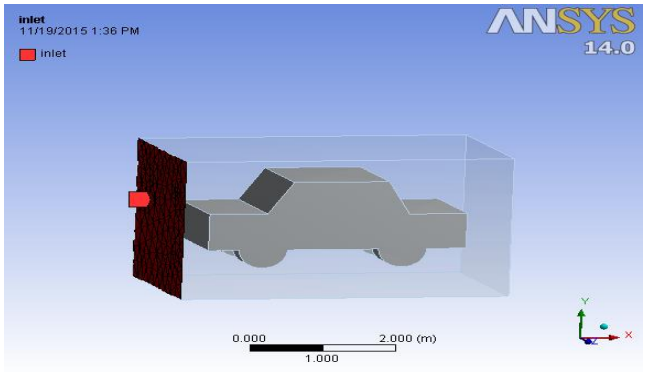

(a)

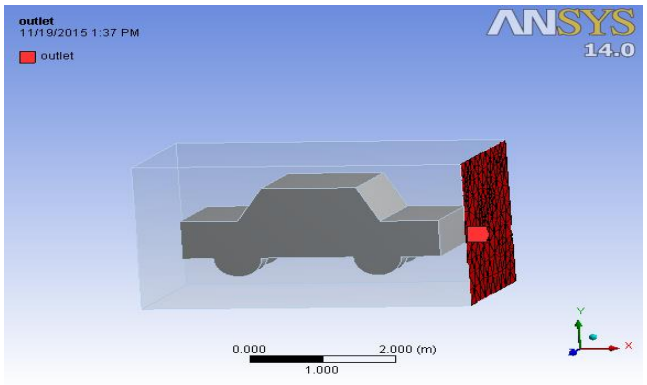

(b)

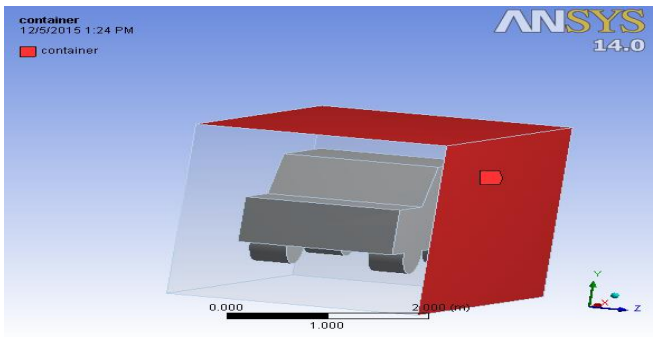

(c)

Figure 4:Boundary Conditions (a) Velocity at inlet (b) Pressure at outlet (c) Wall Symmetry

4.1Formulations

A pressure based solver was used in the simulation with the following features. Three-dimension incompressible viscid

Navier-Stokes equation was used and the SIMPLE algorithm was selected for pressure/velocity coupling. Standard k−ε turbulence model was used to model the turbulence. The discretization scheme for convection terms of the momentum and turbulence equations adopted was second-order upwind. The standard method was used for the pressure equation. The solution was initialized with an X velocity of 50 km/hr. Airflow was assumed to be incompressible and heat transfer was considered insignificant in this study. Flow velocities and properties were monitored during the simulation, until there is no appreciable change upon further iteration.

6. RESULTS AND DISCUSSIONS

Drag and lift are two important aerodynamic factors that must be looked into while designing cars. Lift is the negative pressure build up at the top and rear surfaces of a car where velocity of flow is higher when compared to that at the front and bottom of the car. Figure 2 shows the static pressure contours on the

At the front end (portion enclosed by circle) the car encounters a high pressure as all the air flowing towards the car gets compressed due to obstruction. As the air finds its way towards the rear its pressure is observed to reduce until it encounters the wind screen area (portion enclosed by a diamond shape). After the air crosses the wind screen it flows over the top surface (portion enclosed in rectangle shape). without any obstruction causing the pressure to fall substantially.

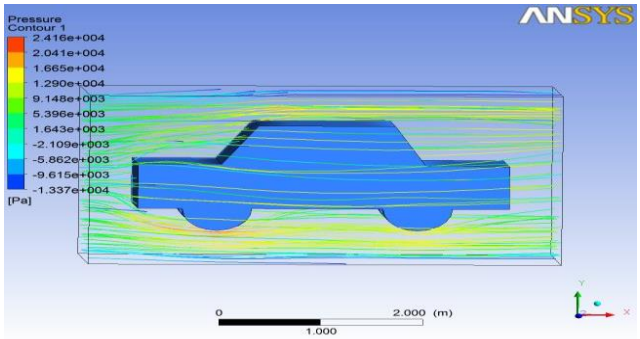

Figure 5(a) Pressure contours for model 1

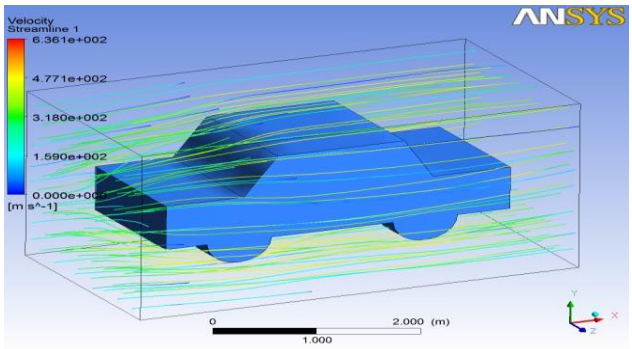

Figure 5(b) Velocity Streamlines for model 1

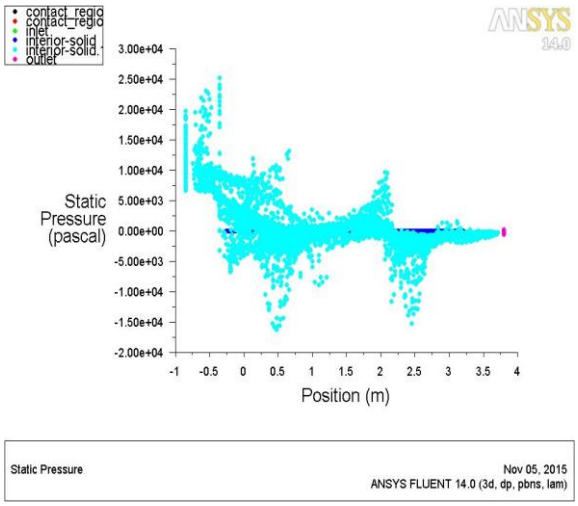

Figure 5 (c) Graph of static pressure

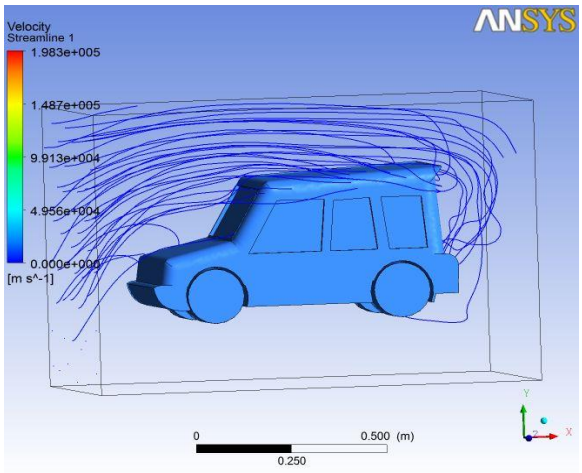

Figure 6(a) Pressure contours for model 2

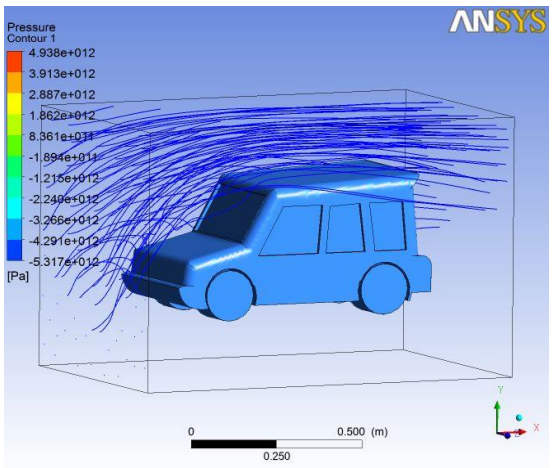

Figure 6(b) Velocity Streamlines for model 2

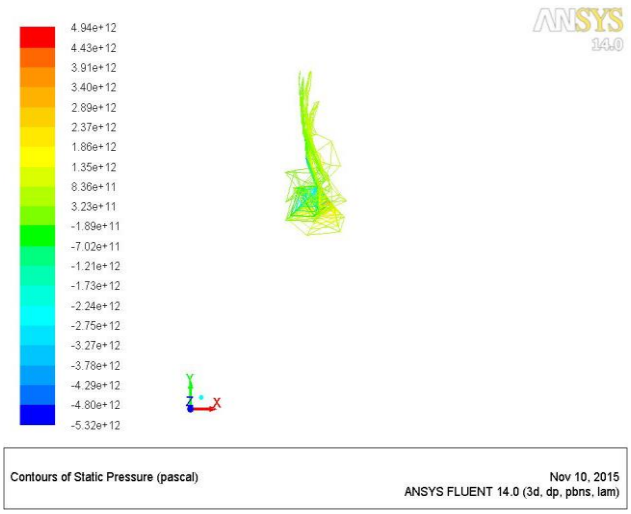

Figure 6 (c) Graph of static pressure

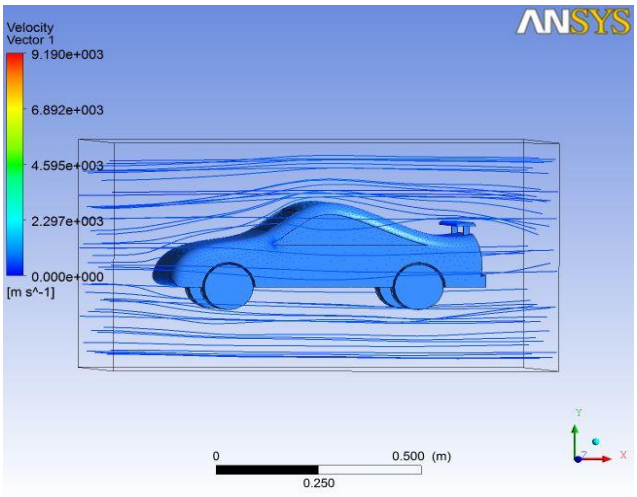

Figure 7(a) Pressure contours for model 3

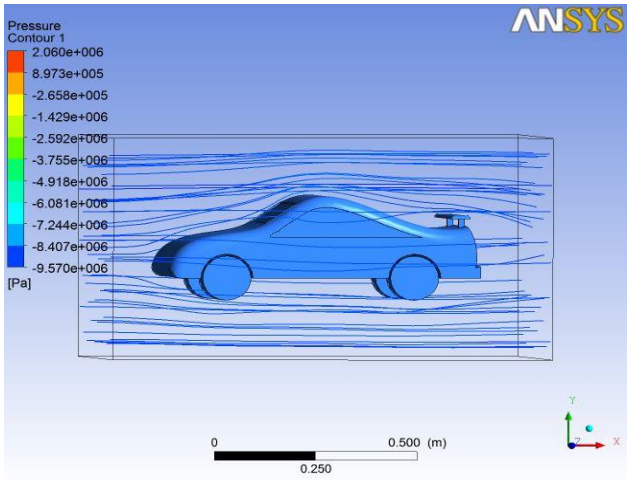

Figure 7(b) Velocity Streamlines for model 3

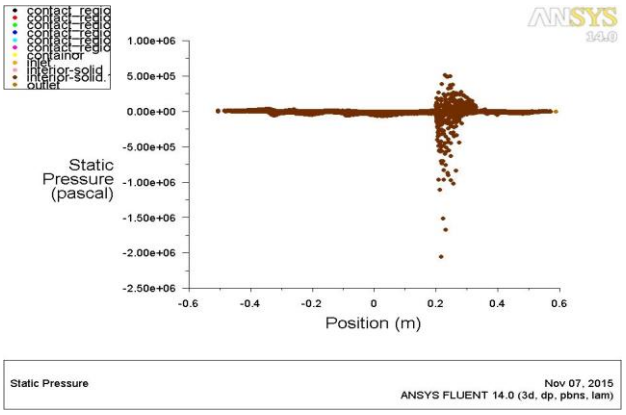

Figure 6 (c) Graph of static pressure

7. CONCLUSION

Thus, after simulation it is observed in the above graph of static pressure that a car with more continuous and smooth shape is less dense and has lesser loss of power due to air pressure.

Also the car with spoiler reduces lift force at the back side of the car. By the disturbance created in the streamline flow due to the presence of a rear spoiler, there is reduction in the flow separation at the trunk resulting in increase of turbulence. In conclusion, the study reveals that rear spoilers have considerable effect on Lift, i.e. vehicle stability and moderate effect on Drag i.e. Fuel consumption.

REFERENCES

[1] Ion Tabacu et. al., "Numerical simulation of flows around two different shaped cars using CFD", Scientific bulletin- Automotive series, year XVI, No.20 (B), University of Pitesti.

[2] Dan Barbut et. al., "CFD analysis of road vehicles- case study", INCAS bulletin, Volume 3, Issue 3/2011.

[3] Hitoshi Fakuda et. al., "Improvement of vehicle aerodynamics by wake control", JSAE review, 16, 1995.

[4] Chainani. A et. al., "CFD Investigation of airflow on a model radio control race car", Proceedings of world congress on Engineering, Volume II, 2008, London, UK.